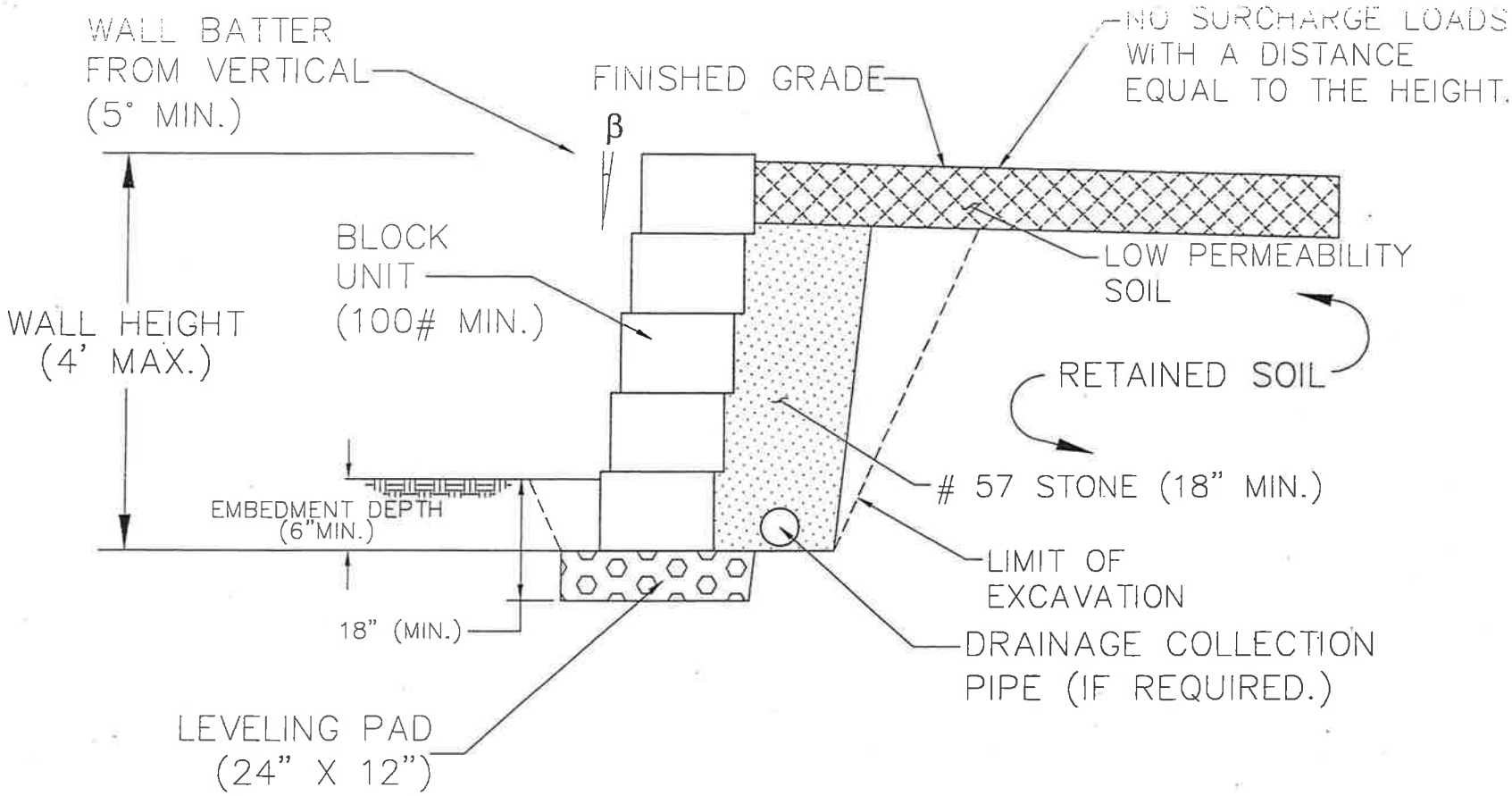

TYPICAL SEGMENTAL BLOCK WALL SECTION

N.T.S.